General Specifications

Voltage AC (Un)	230V
Voltage Range	176~276V AC
Base Current (Ib)	10A
Max. Current (Imax)	80A
Mini Current (Imin)	0.5A
Starting current	0.4% of Ib
Power consumption	<2W/10VA
Frequency	50Hz(±10%)
AC voltage withstand	4KV for 1 minute
Impulse voltage withstand	6KV-1.2uS wavform
Overcurrent withstand	30Imax for 0.01s
Pulse output rate	1000imp/kWh (default)
Display	LCD with backlit

Accuracy

Energy	Class 1 IEC62053-21 Class B EN50470-1/3

Environment

Operating temperature	-25℃ to +55℃
Storage and transportation temperature	-40℃ to +70℃
Reference temperature	23℃±2℃
Relative humidity	0 to 95%, non-condensing
Altitude	up to 2000m
Warm up time	10s
Installation category	CAT II
Mechanical Environment	M1
Electromagnetic environment	E2
Degree of pollution	2
IP level	IP51 (Indoor, the meter is to be installed in Cabinet higher than IP51)

Output

Pulse Output

The meter provides one pulse output.

It is fixed up with total kWh. The constant is 1000imp/kWh.

Dimensions

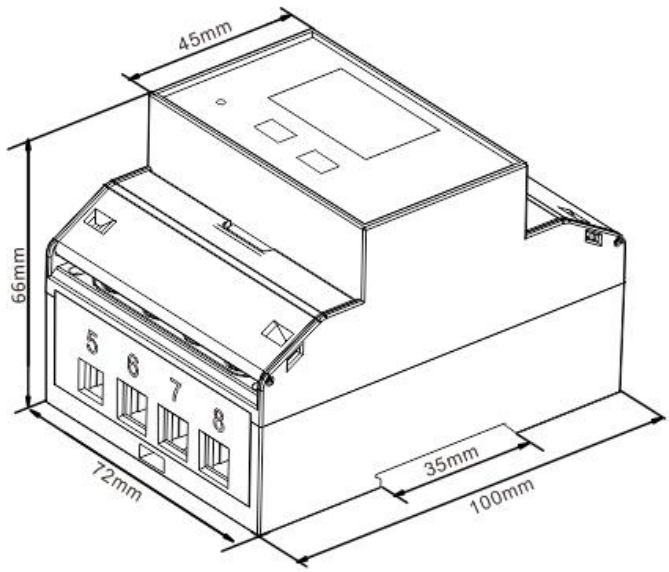

Wiring Diagram

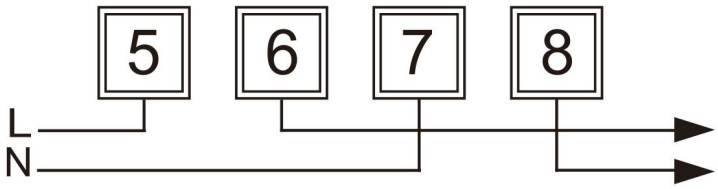

Information for Your Own Safety

This manual does not contain all of the safety measures operating the equipment (module, device) for different conditions and requirements. However, it does contain information which you must know for your own safety and to avoid damages. This information is highlighted by a warning triangle indicating the degree of potential danger.

Warning

It means that failure to follow the instruction can result in death, serious injury or considerable material damage.

Caution

It means hazard of electric shock and failure to take the necessary safety precautions will result in death, serious injury or considerable material damage.

Qualified personnel

Operation of the equipment (module, device) described in this manual may only be performed by qualified personnel. Qualified personnel in this manual means person who are authorized to commission, start up, ground and label devices, systems and circuits according to safety and Regulatory standards.

Proper handling

The prerequisites for perfect, reliable operation of the product are proper transport, proper storage, installation and proper operation and maintenance. When operating electrical equipment, parts of this equipment automatically carry dangerous voltages. Improper handling can therefore result in serious injuries or material damage.

- ✧ Use only insulating tools.
- ✧ Do not connect while circuit is live (hot).
- ✧ Do not connect the meter to a 3 phase - 400VAC – network.
- ✧ Place the meter only in dry surroundings.
- ✧ Do not mount the meter in an explosive area or expose the meter to dust, mildew and insects.
- ✧ Make sure the wires are suitable for the maximum current of this meter.

- Make sure the AC wires are connected correctly before activating the current/voltage to the meter.
- Do not touch the meter connecting clamps directly with metal, blank wire and your bare hands as you may get electrical shock.
- Make sure the protection cover is placed after installation.
- Installation, maintenance and reparation should only be done by qualified personnel.
- Never break the seals and open the front cover as this might influence the function of the meter, and will cause no warranty.
- Do not drop, or allow strong physical impact on the meter as the high precisely components inside may be damaged.

Operation instruction

	Software version
	Pulse Constant, fixed 1000imp/kWh
	Total kWh

Declaration of Conformity

We Zhejiang Eastron Electronic Co., Ltd. Declare under our sole responsibility as the manufacturer that the single phase prepay energy meter SDM320Y-D correspond to the production model described in the EU-type examination certificates and to the requirements of the Directive 2014/32/EU EU type examination certificate number 0120/SGS0391. Identification number of the Notified Body is NB0120.