SDM630MCT-2T

DIN Rail Smart Energy Meter for Single and Three Phase Electrical Systems

- Measures kWh Kvarh, KW, Kvar, KVA, PF, Hz, dmd, V, A, etc.
- Bi-directional measurement IMP & EXP
- Two pulse outputs
- RS485 Modbus
- Din rail mounting 35mm
- 1A/5A CT connection
- Better than Class 1 / B accuracy

USER MANUAL

2022 V2.5

Important Safety Information is contained in the Maintenance section. Familiarize yourself with this information before attempting installation or other procedures.

Symbols used in this document:

Risk of Danger: These instructions contain important safety information: Read them before starting installation or servicing of the equipment

Caution: Risk of Electric Shock

1 Introduction

This document provides operating, maintenance and installation instructions . The unit SDM630MCT-2T V2 measures and displays the characteristics of single phase two wires(1p2w), three phase three wires(3p3w,) and three phase four wires(3p4w) supplies, including KWh, kVarh, KW, KVar, KVA, PF, Frequency, Voltage, Current, dmd. THD etc. Energy is measured in terms of kWh, kVArh. Maximum demand current can be measured over preset periods of up to 60minutes. The requisite current input(s) are obtained via current transformers(CT).

This meter can be configured to work with a wide range of CTs,giving the unit a wide range of operation.Built-in interfaces provide pulse and RS485 Modbus RTU outputs.Configuration is password protected.

This unit has 2 source powers and can show energy of T1 and T2. If you want to shift T1 to T2, as far as there is 230V load between terminal 7 and 8 ,the meter will count up to T2. The pulse output 1 and pulse output2 is switched automatically when the power is input.

1.1 Unit Characteristics

The unit can measure and display:

- Line voltage and THD% (total harmonic distortion) of all phases
- Line Frequency
- Currents, Current demands and current THD% of all phases
- Power, maximum power demand and power factor
- Active energy imported and exported
- Reactive energy imported and exported

The unit has password-protected set-up screens for:

- Changing password
- Supply system selection 1p2w, 3p3w,3p4w
- Demand Interval time
- Reset for demand measurements
- Pulse output duration

Two pulse outputs indicate real-time energy measurement. A RS485 output allows remote monitoring from another display or a computer.

1.2 Current Transformer Primary Current

The unit can be configured to operate with CT ratio between primary current and secondary current. The secondary CT has two options: 1A/5A.

**Please note for the MID approved version, you will only have one opportunity to set the CT ratio.*

1.3 RS485 Serial – Modbus RTU

This unit uses a RS485 serial port with Modbus RTU protocol to provide a means of remotely monitoring and controlling the unit.

Set-up screens are provided for setting up the RS485 port. Refers to section 4.8.

1.4 Pulse output

This unit provides two pulse outputs that clock up measured T1 active energy and T2 active energy. The default constant for active energy is 3200imp/kWh. The pulse width for active energy can be set from the set-up menu.

2. Start Up Screens

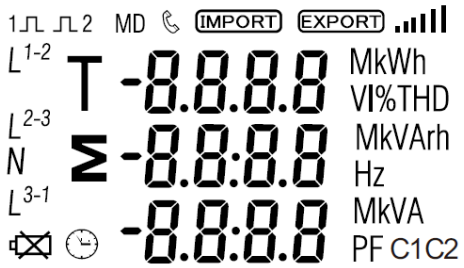	The first screen lights up all display segments and can be used as a display check.
	The second screen indicates the firmware installed in the unit and its build number.
	The interface performs a self-test and indicates the result if the test passes.

*After a short delay, the screen will display active energy measurements.

3. Measurements

The buttons operate as follows:

	Selects the Voltage and Current display screens In Set-up Mode, this is the “Left” or “Back” button.
	Select the Frequency and Power factor display screens In Set-up Mode, this is the “Up” button
	Select the Power display screens In Set-up Mode, this is the “Down” button
	Select the Energy display screens In Set-up mode, this is the “Enter” or “Right” button

3.1 Voltage and Current

Each successive pressing of the

button selects a new range:

L1 000.0 V L2 000.0 L3 000.0	Phase to neutral voltages
L1-2 380.0 L2-3 380.0 V L3-1 380.0	Phase to neutral voltages
L1 0.000 L2 0.000 A L3 0.000	Current on each phase
N 0.000 A	Current on netural
L1 00.00 V %THD L2 00.00 L3 00.00	Phase to neutral voltage THD%

L1 00.00 I%THD L2 00.00 L3 00.00	Current THD% for each phase

3.2 Frequency and Power factor and Demand

Each successive pressing of the

button selects a new range:

M 00.00 Hz 0.999 PF	Frequency and Power Factor (total)
L1 0.999 L2 0.999 L3 0.999 PF	Power Factor of each phase
MD L1 0.000 L2 0.000 A L3 0.000	Maximum Current Demand
MD 0.000 kW M	Maximum Power Demand

3.3 Power

Each successive pressing of the

button select a new range:

L1 0.000 kW L2 0.000 L3 0.000	Instantaneous Active Power in kW
L1 0.000 L2 0.000 kVAr L3 0.000	Instantaneous Reactive Power in kVAr
L1 0.000 L2 0.000 L3 0.000 kVA	Instantaneous Volt-amps in KVA
0.000 kW M 0.000 kVAr 0.000 kVA	Total kW, kVArh, kVA

3.4 Energy Measurements

Each successive pressing of the button selects a new range:

0000 kWh M 031.4	Total active energy in kWh

Σ 0000 000.0 kVArh	Total reactive energy in kVArh
T 1 run 0000 000.1 kWh	T1 active energy in kWh When T1 working, the symbol“ T1” will be flashing
T 2 0000 000.0 kWh	T2 active energy in kWh When T2 working, the symbol “ T2” will be flashing
T 1 run 0000 000.2 kVArh	T1 reactive energy in kVArh When T1 working, the symbol “ T1” will be flashing
T 2 0000 000.0 kVArh	T2 reactive energy in kVArh When T2 working, the symbol “ T2” will be flashing

4. Setting Up

To enter set-up mode, pressing the button for 3 seconds, until the password screen appears.

Setting up is password-protected so you must enter the correct password (default '1000') before processing. If an incorrect password is entered, the display will show: PASS Err

To exit setting-up mode, press U/I ESC repeatedly until the measurement screen is restored.

4.1 Set-up Entry Methods

Some menu items, such as password and CT, require a four-digit number entry while others, such as supply system, require selection from a number of menu options.

4.1.1 Menu Option Selection

1) Use the M and P buttons to select the required item from the menu shown in section 4.1. selection does not roll over between bottom and top of list

2) Press E to confirm your selection

3) If an item flashes, then it can be adjusted by the M and P buttons. If not, there maybe a further layer.

4) Having selected an option from the current layer, press E to confirm your selection. The SET indicator will appear.

5) Having completed a parameter setting, press U/I ESC to return to a higher menu level. The SET indicator will be removed and you will be able to use the M and P buttons for further menu selection.

6) On completion of all setting-up, press U/I ESC repeatedly until the measurement screen is restored.

4.1.2 Number Entry Procedure

When Setting up the unit , some screens require the entering of a number. In particular, on entry to the setting up section, a password must be entered. Digits are set individually, from left to right. The procedure is as follows:

1) The current digit to be set flashes and is set using the M and P buttons

2) Press E to confirm each digit setting. The SET indicator appears after the last digit has been set.

3) After setting the last digit, press U/I ESC to exit the number setting routine. The SET indicator will be removed.

4.2 Communication

There is a RS485 port can be used for communication using Modbus RTU protocol.
For Modbus RTU, parameters are selected from front panel.

4.2.1 RS485 Address

(The range is from 001 to 247)

	From the Set-up menu,use M and P buttons to select the Address ID
	Press E button to enter the selection routine.The current setting will be flashing.

	Use M and P buttons to choose Modbus Address(001 to 247)
On completion of the entry procedure, press E button to confirm the setting and press U/I ESC button to return the main set-up menu.	

4.2.2 Baud Rate

	From the Set-up menu, use M and P buttons to select the Baud Rate option.
	Press E to enter the selection routine. The current setting will flash.
	Use M and P buttons to choose Baud rate 2.4k. 4.8k, 9.6k, 19.2k, 38.4k
On completion of the entry procedure, press E to confirm the setting and press U/I ESC to return to the main set up menu.	

4.2.3 Parity

	From the Set-up menu, use M and P buttons to select the Parity option.
	Press E to enter the selection routine. The current setting will flash.
	Use M and P buttons to choose Parity (EVEN / ODD / NONE)
On completion of the entry procedure, press E to confirm the setting and press U/I ESC to return to the main set up menu.	

4.2.4 Stop bits

	From the Set-up menu, use M and P buttons to select the Stop Bit option.
	Press E to enter the selection routine. The current setting will flash.

SEt StoP 1	Use M and P buttons to choose Stop Bit (2 or 1)
On completion of the entry procedure, press E to confirm the setting and press U/I ESC to return to the main set up menu.	

4.3 CT

The CT option sets the secondary current(CT2 1A or 5A) of the current transformer (CT) that wires to the meter.

SEt Ct2 5	From the Set-up menu, use M and P buttons to select the CT option.
SEt Ct2 5	Secondary CT setting Press E to enter the CT secondary current selection routine.:5A/1A
Ct rAtE 0001	Set CT Ratio value Press E to enter the CT Ratio setting screen.The range is from 0001 to 9999.
For example,if set the ratio to be 100,it means the primary current equals secondary currentx100. **Please note for the MID approved version, you will only have one opportunity to set the CT ratio.*	

4.4 PT

The PT option sets the secondary voltage (PT2 100 to 500V) of the Voltage transformer (PT) that wires to the meter.

	From the Set-up menu, use M and P buttons to select the PT option. The screen will show the voltage PT secondary voltage value. The default value is 400V
	Secondary PT setting Press E to enter the PT secondary voltage selection routine. The range is from 100 to 500V
	Set PT ratios value Press E to enter the PT ratio screen. The range is from 0001 to 9999
For example,if set the ratio to be 100,it means the primary voltage equals secondary voltagex100	

4.5 Pulse Output

4.5.1 Pulse output type

1		From the Set-up menu, use M and P buttons to select the Pulse output option.
2-1		Press E to enter the selection routine. The unit symbol will flash.

2-2	SEt rLY kVArh	Use M and P buttons to choose kWh or kVArh.
On completion of the entry procedure, press E to confirm the setting and press U/I ESC to return to the main set up menu.		

4.5.2. Pulse rate

Use this to set the energy represented by each pulse. Rate can be set to 1 pulse per 0.01kWh/0.1kWh/1kWh/10kWh/100/1000kWh.

SEt
rAtE
10

(It shows 1 impulse = 10kWh/kVArh)

1	SEt rAtE 10	From the Set-up menu, use M and P buttons to select the Pulse Rate option.
2	SEt rAtE 10	Press E to enter the selection routine. The current setting will flash. 0.01/0.1/1/10/100/1000kWh/kVArh per pulse
Use M and P buttons to choose pulse rate. On Completion of the entry procedure, press E to confirm the setting and press U/I ESC to return to the main set up menu.		

4.5.3 Pulse Duration

The energy monitored can be active or reactive and the pulse width can be selected as 200, 100 or 60ms.

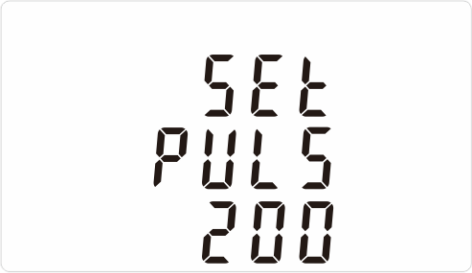

(It shows pulse width of 200ms)

	From the Set-up menu, use M ▲ and P ▼ buttons to select the Pulse width option.
	Press E ↵ to enter the selection routine. The current setting will flash.
Use M ▲ and P ▼ buttons to choose pulse width.On Completion of the entry procedure, press E ↵ to confirm the setting and press U/I ESC to return to the main set up menu.	

4.6 DIT Demand Integration Time

This sets the period in minutes over which the current and power readings are integrated for maximum demand measurement. The options are: off, 5, 10,15 30,60 minutes

	From the set-up menu, use M ▲ and P ▼ buttons to select the DIT option. The screen will show the currently selected integration time.

SEt dIt 10	Press E to enter the selection routine. The current time interval will flash
SEt dIt	Use M and P buttons to select the time required.
SEt dIt 20	Press E to confirm the selection. SET indicator will appear.
Press U/I BSC to exit the DIT selection routine and return to the menu.	

4.7 Backlit setup

1	SEt LP 60	The backlit lasting time is settable Default lasting time is 60minutes For example, if it's set as 5, the backlit will be off in 5minutes from the last time operation on the meter.
2	SEt LP 60	Press E to enter the selection routine. The current time interval will flash The options can be: 0(always on),5,10,30,60,120minutes
Use M and P buttons to select the time required. Press E to confirm the set-up,		

4.8 Supply System

Use this section to set the type of power supply being monitored.

	From the Set-up menu, use M ▲ and P ▼ buttons to select the System option. The screen will show the currently selected power supply .
	Press E ↵ to enter the selection routine. The current selection will flash
	Use M ▲ and P ▼ buttons to select the required system option: 1P2(W),3P3(W) ,3P4(W)
	Press E ↵ to confirm the selection. SET indicator will appear.
Press U/I ESC to exit the system selection routine and return to the menu. SET will disappear and you will be returned to the main Set-up Menu	

4.9 CLR

The meter provides a function to reset the maximum demand value of current and power.

	From the Set-up menu, use M ▲ and P ▼ buttons to select the reset option.

MD CLr	Press E to enter the selection routine. The MD will flash.
Press E to confirm the setting and press U/I ESC to return to the main set up menu.	

4.10 Change password

SEt PASS 1000	Use the M and P to choose the change password option
SEt PASS 1000	Press the E to enter the change password routine. The new password screen will appear with the first digit flashing
SEt PASS 1000	Use M and P to set the first digit and press E to confirm your selection. The next digit will flash.
SEt PASS 1100	Repeat the procedure for the remaining three digits

SEt PASS 1100	After setting the last digit, SET will show.
Press U/I ESC to exit the number setting routine and return to the Set-up menu. SET will be removed	

4.11 Reverse connected current inputs correction set-up

1	SEt SYS CONt	use M and P buttons to select page "SET sys cont"
2-1	SEt 1A Frd	Press to E enter Phase A , the default is Frd (forward)
2-2	SEt 1b Frd	use M and P buttons to Phase B or C setting pages

4.11.1 How to operate if phase A is reversely connected

1	SEt 1A Frd	Go to phase A setting page

2		Press E to enter the selection routine. The Frd will flash. Use P button to change Frd to Rev.
Press E to confirm the setting and press U/I ESC to return to the main set up menu.		

5 Specifications

5.1 Measured Parameters

The unit can monitor and display the following parameters of a single phase two wire(1p2w), three phase three wire(3p3w) or four phase four wire(3p4w) supply.

5.1.1 Voltage and Current

Phase to neutral voltages 85 to 276V a.c. (not for 3p3w supplies)
Voltages between phases 147 to 478V a.c. (3p supplies only)
Percentage total voltage harmonic distortion (THD%) for each phase to N (not for 3p3w supplies)
Percentage voltage THD% between phases (three phase supplies only)
Current THD% for each phase

5.1.2 Power factor and Frequency and Max. Demand

Frequency in Hz
Instantaneous power:
- Power 0 to 3600 MW
- Reactive Power 0 to 3600 MVAr
- Volt-amps 0 to 3600 MVA

Maximum demanded power since last Demand reset Power factor
Maximum neutral demand current, since the last Demand reset (for three phase supplies only)

5.1.3 Energy Measurements

- Imported/Exported active energy 0 to 9999999.9 kWh
- Imported/Exported reactive energy 0 to 9999999.9 kVArh
- Total active energy 0 to 9999999.9 kWh
- Total reactive energy 0 to 9999999.9 kVArh

5.2 Measured Inputs

Voltage inputs through 4-way fixed connector with 2.5mm^2 stranded wire capacity. single phase two wire(1p2w), three phase three wire(3p3w) or four phase four wire(3p4w) unbalanced. Line frequency measured from L1 voltage or L3 voltage.
Three current inputs (six physical terminals) with 2.5mm^2 stranded wire capacity for connection of external CTs. Nominal rated input current 5A or 1A a.c. Rms.

5.3 Accuracy

- Voltage 0·5% of range maximum
- Current 0·5% of nominal
- Frequency 0·2% of mid-frequency
- Power factor 1% of unity (0.01)
- Active power (W) ±1% of range maximum
- Reactive power (VAr) ±2% of range maximum
- Apparent power (VA) ±1% of range maximum
- Active energy (Wh) Class 1 IEC 62053-21
- Reactive energy (VARh) ±2% of range maximum
- Total harmonic distortion 1% up to 31st harmonic
- Temperature co-efficient Voltage and current = 0.013%/°C typical
  Active energy = 0·018%/°C, typical
- Response time to step input 1s, typical, to >99% of final reading, at 50 Hz.

5.4 Auxiliary Supply

Two-way fixed connector with 2·5mm2 stranded wire capacity.

85 to 275V a.c. 50/60Hz ±10% or 120V to 380V d.c. ±20%. Consumption < 10W.

5.5 Interfaces for External Monitoring

Three interfaces are provided:

- an RS485 communication channel that can be programmed for Modbus RTU protocol
- a pulse output indicating real-time measured energy.(configurable)
- a pulse output 3200imp/kWh (not configurable)

The Modbus configuration (Baud rate etc.) and the pulse relay output assignments (kW/kVArh, import/export etc.) are configured through the Set-up screens.

5.6.1 Pulse Output

The pulse output can be set to generate pulses to represent kWh.

Rate can be set to generate 1 pulse per:

0.01 = 10 Wh/VArh

0.1 = 100 Wh/VArh

1 = 1 kWh/kVArh

10 = 10 kWh/kVArh

100 = 100 kWh/kVArh

Pulse width 200/100/60 ms.

Relay Rating 230V ac 50mA

Pulse width: 200/100(default)/60ms

Pulse output 2 is non-configurable. It is fixed up with total kWh. The constant is 3200imp/kWh.

5.6.2 RS485 Output for Modbus RTU

For Modbus RTU, the following RS485 communication parameters can be configured from the Set-up menu:

Baud rate 2400, 4800, 9600, 19200, 38400

Parity none(default)/odd/even

Stop bits 1 or 2

RS485 network address *nnn* – 3-digit number, 1 to 247

Modbus™ Word order Hi/Lo byte order is set automatically to normal or reverse. It cannot be configured from the set-up menu.

5.7 Reference Conditions of Influence Quantities

Influence Quantities are variables that affect measurement errors to a minor degree. Accuracy is verified under nominal value (within the specified tolerance) of these conditions.

- Ambient temperature 23°C ±1°C
- Input waveform 50 or 60Hz ±2%
- Input waveform Sinusoidal (distortion factor < 0·005)
- Auxiliary supply voltage Nominal ±1%
- Auxiliary supply frequency Nominal ±1%
- Auxiliary supply waveform (if AC) Sinusoidal (distortion factor < 0·05)
- Magnetic field of external origin Terrestrial flux

5.8 Environment

- Operating temperature -25°C to +55°C*
- Storage temperature -40°C to +70°C*
- Relative humidity 0 to 90%, non-condensing
- Altitude Up to 2000m
- Warm up time 1 minute
- Vibration 10Hz to 50Hz, IEC 60068-2-6, 2g

5.9 Mechanics

- DIN rail dimensions 72 x 94.5 mm (WxH) per DIN 43880
- Mounting DIN rail (DIN 43880)
- Sealing IP20 (minimum)
- Material Self-extinguishing UL 94 V-0

6. Dimensions

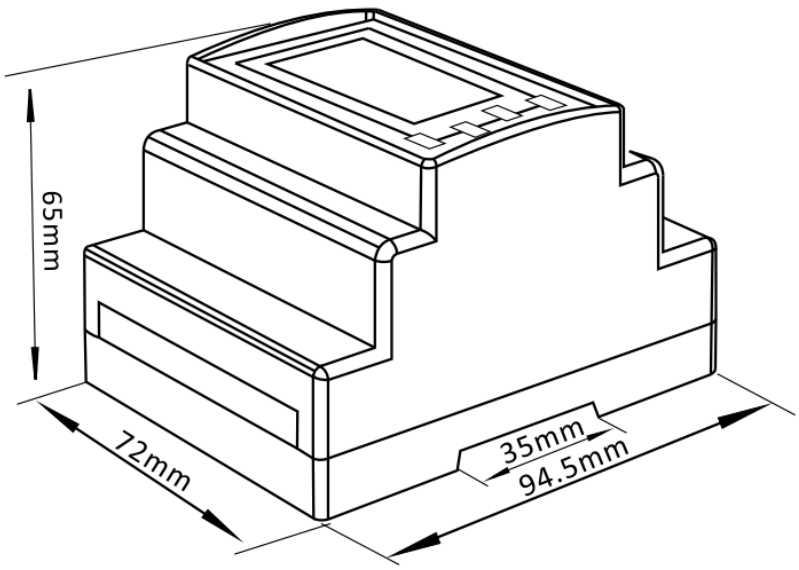

7. Installation

1) Single phase two wire

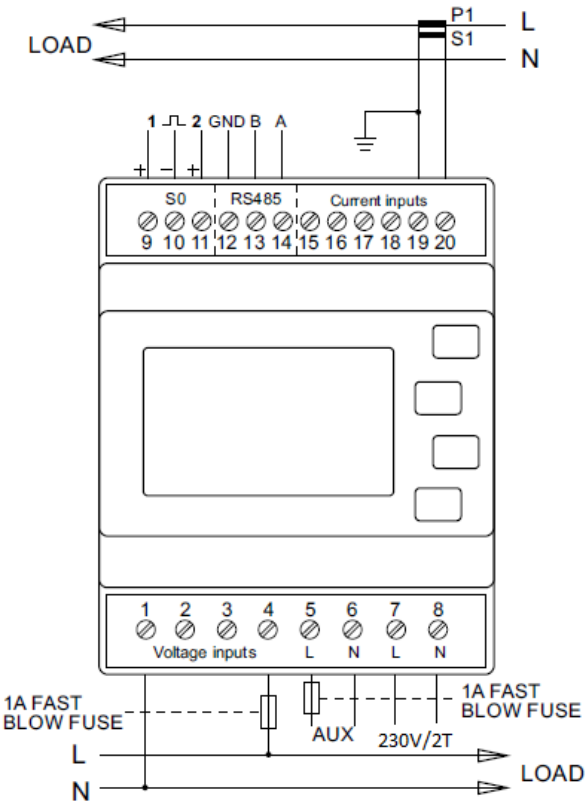

2) Three Phase three wire

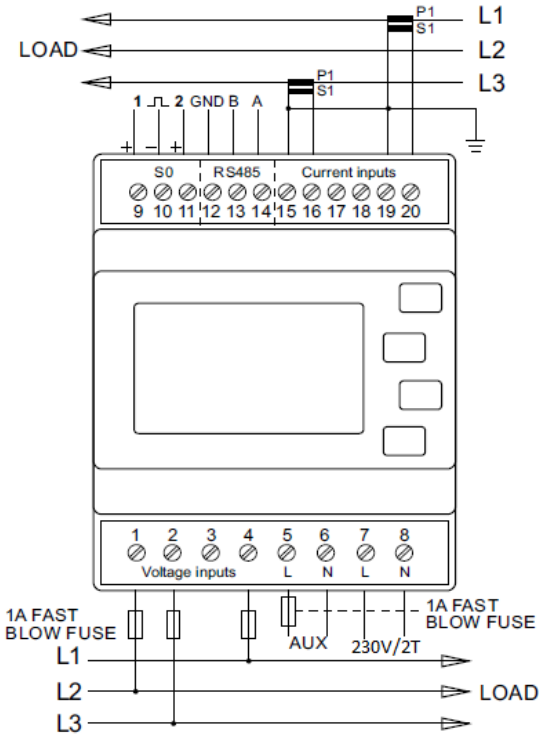

3) Three phase four wire

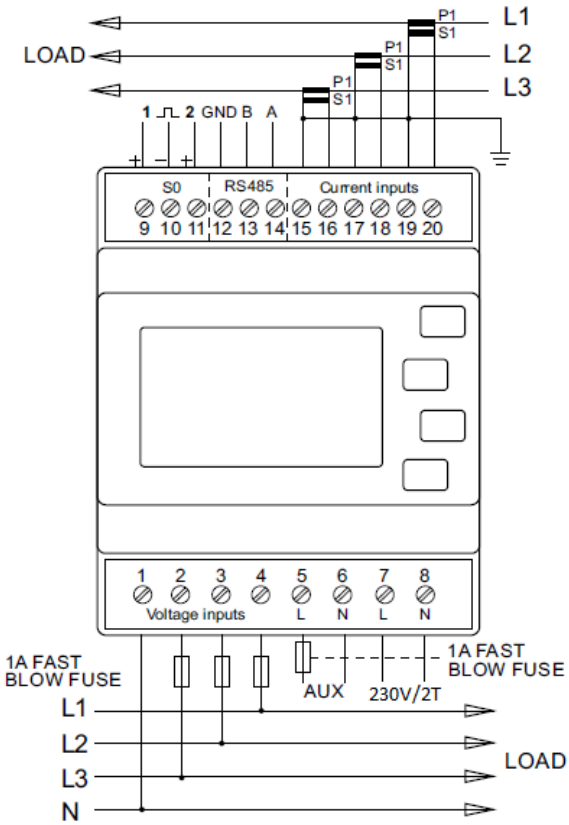

If you have any question, please feel free to contact us at:

Zhejiang Eastron Electronic Co., Ltd.
NO.1369 Chengnen Road, Jiaxing, Zhejiang, China

Email: sales@eastrongroup.com
Tel: 86-0573-83698881
Web: www.eastrongroup.com